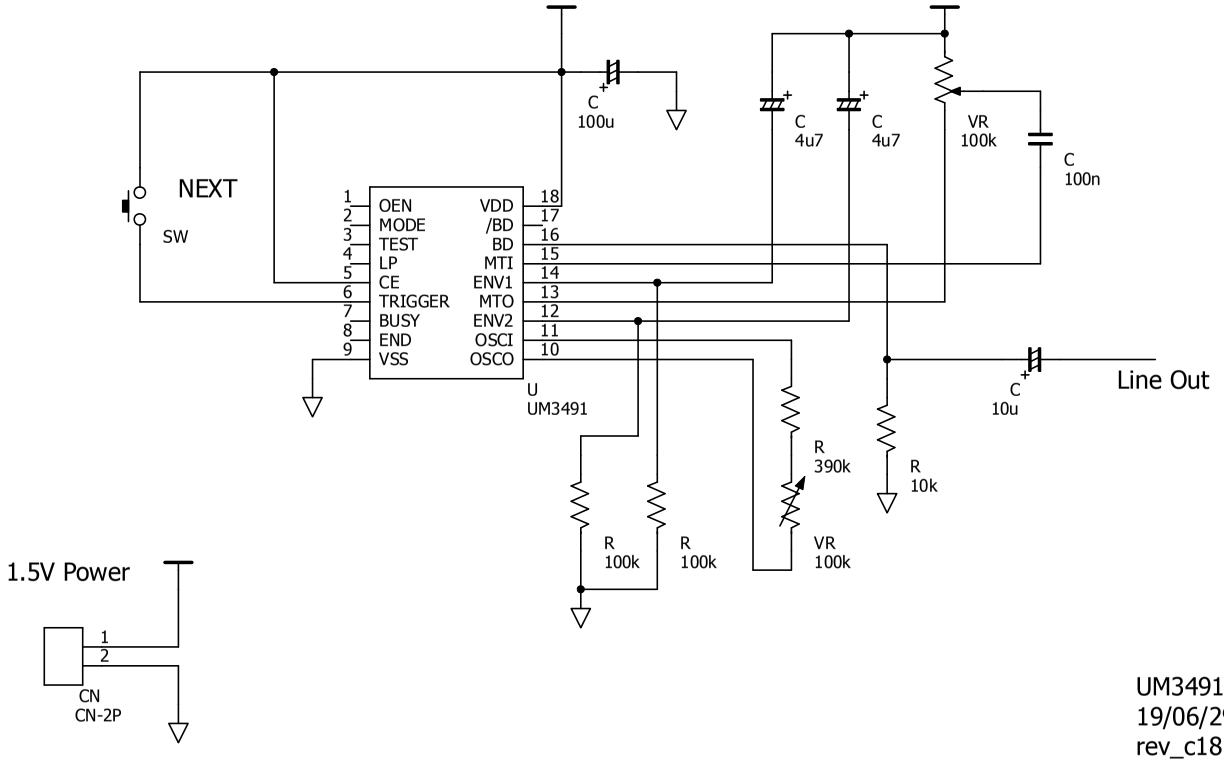

UM3491 Test Circuit
19/06/29 Eleken
rev_c1815@yahoo.co.jp