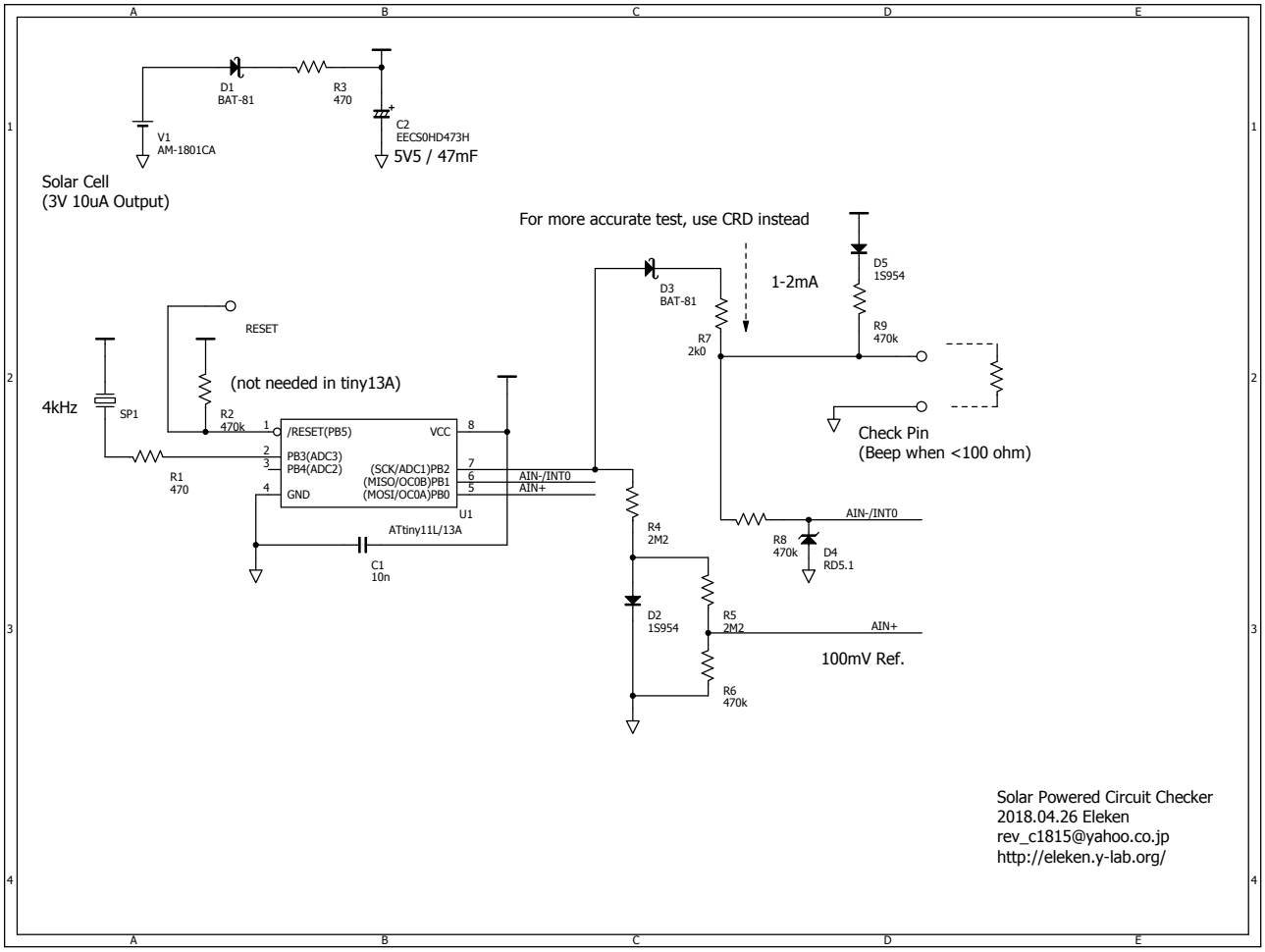
D1
BAT-81
R3
470
V1
AM-1801CA
C2
EECS0HD473H
5V5 / 47mF
Solar Cell
(3V 10uA Output)
For more accurate test, use CRD instead
D5
1S954
1-2mA
D3
BAT-81
R9
470k
R7
2k0
RESET
(not needed in tiny13A)
4kHz
SP1
R2
470k
/RESET(PB5)
VCC
PB3(ADC3)
PB4(ADC2)
(SCK/ADC1)PB2
(MISO/OC0B)PB1
(MOSI/OC0A)PB0
GND
U1
ATtiny11L/13A
AIN-/INT0
AIN+
R1
470
C1
10n
Check Pin
(Beep when <100 ohm)
R4
2M2
R8
470k
D4
RD5.1
D2
1S954
R5
2M2
100mV Ref.
R6
470k
Solar Powered Circuit Checker
2018.04.26 Eleken
rev_c1815@yahoo.co.jp
http://eleken.y-lab.org/